plastpro

5200 W. CENTURY BLVD.
LOS ANGELES, CA 90045

DIRECT GLAZED FIBERGLASS DOORS SINGLES w/ SIDELITE(S)

INSWING / OUTSWING "NON-IMPACT"

GENERAL NOTES

1. This product has been evaluated and is in compliance with the 8th Edition (2023) Florida Building Code (FBC) structural requirements excluding the "High Velocity Hurricane Zone" (HVHZ).
2. Product anchors shall be as listed and spaced as shown on details. Anchor embedment to base material shall be beyond wall dressing or stucco.
3. When used in areas requiring wind borne debris protection, this product is required to be protected with an impact resistant covering that complies with FBC Sections 1609.1.2 & R301.2.1.2.
4. For 2x stud framing construction, anchoring of these units shall be the same as that shown for 2x buck masonry construction.
5. Site conditions that deviate from the details of this drawing require further engineering analysis by a licensed engineer or registered architect.

TABLE OF CONTENTS

SHEET #	DESCRIPTION
1	Typical elevations, design pressures & general notes
2	Door & Sidelite panel details
3	Elevations
4	Horizontal cross sections
5	Horizontal & Vertical Cross Sections (2X Buck)
6	Horizontal & Vertical Cross Sections (1X Buck)
7	Horizontal & Vertical Cross Sections (Direct to Masonry)
8	Vertical Cross Sections (Thresholds)
9	Horizontal & Vertical Cross Sections (Direct to Masonry)
10	Buck anchoring
11	Frame anchoring & hardware details
12	Components
13	Bill of materials & components

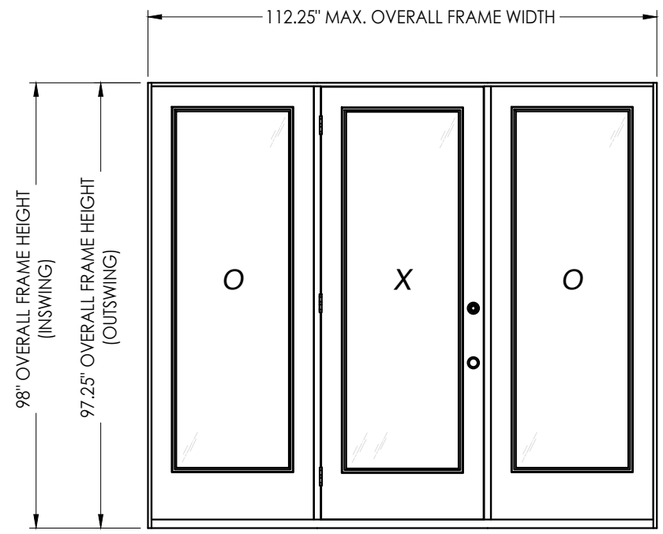

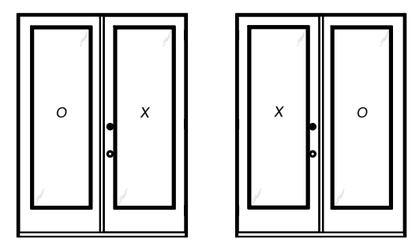

OX XO

CONTINUOUS HEAD & SILL

CONFIGURATION	MAX. FRAME DIMENSION	DESIGN PRESSURE (PSF) INSWING		DESIGN PRESSURE (PSF) OUTSWING	
		POSITIVE	NEGATIVE	POSITIVE	NEGATIVE
OX/XO	74.75" x 98.0"	+40.0	-45.0	+40.0	-40.0
OXO	112.25" x 98.0"	+40.0	-45.0	+40.0	-40.0

L.F. SCHMIDT LICENSE No. 43409 STATE OF FLORIDA PROFESSIONAL ENGINEER

Digitally signed by Lyndon F Schmidt
Date: 2023.08.10 16:28:40 -04'00'

This item has been digitally signed and sealed by **L. F. Schmidt, P.E.** on the date adjacent to the seal.

Printed copies of this document are not considered signed and sealed and the signature must be verified on any electronic copies.

THIS PRODUCT APPROVAL IS VALID ONLY FOR THE STATE OF FLORIDA

Documents Prepared By:
Lyndon F. Schmidt
P.E. No. 43409
RW BUILDING CONSULTANTS, INC.
P.O. Box 230, Valrico, FL 33595
Phone No.: 813.659.9197
FBPE Registry No. 9813

PRODUCT: PLASTPRO INC. FIBERGLASS DOOR

PART OR ASSEMBLY: TYPICAL ELEVATION, DESIGN PRESSURES & GENERAL NOTES

REVISIONS

NO.	DATE		BY
2	8/10/23	UPDATE TO 8TH ED. (2023) FBC	LFS
1	7/23/20	UPDATE TO 7TH ED (2020) FBC	LFS

DATE: 2/11/19
SCALE: N.T.S.
DWG. BY: MT
CHK. BY: LFS
DRAWING NO.: FL-28685.7
SHEET 1 OF 13

© 2019 R.W. Building Consultants Inc.

Z:\2023 FBC Drawings\Plastpro\FL-28685 R3\FL-28685.7.dwg

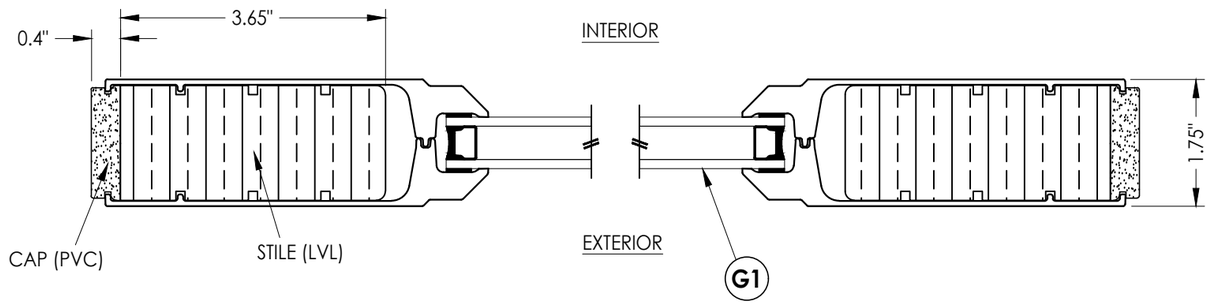

1/2 **HORIZONTAL CROSS SECTION**

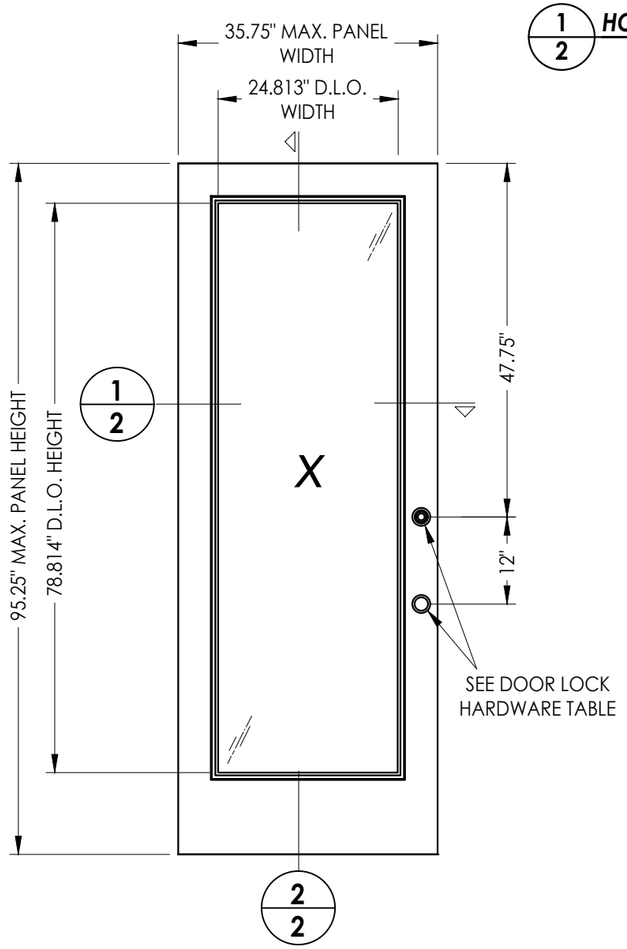

40 **PLASTPRO DOOR PANEL**

50 **PLASTPRO SIDELITE PANEL**

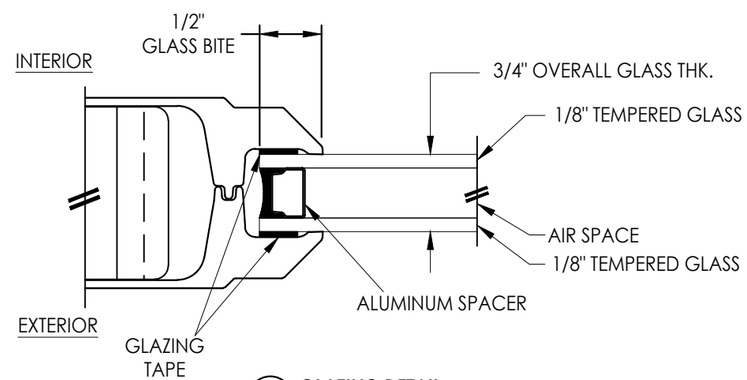

G1 **GLAZING DETAIL**

HARDWARE TABLE		
MANUFACTURER	MODEL	
YALE	KNOB:	YH COLLECTION
	DEADBOLT:	YH COLLECTION
KWIKSET	KNOB:	SIGNATURE SERIES
	DEADBOLT:	SIGNATURE SERIES (980)
SCHLAGE	KNOB:	F-SERIES (F51)
	DEADBOLT:	B-SERIES (B60)

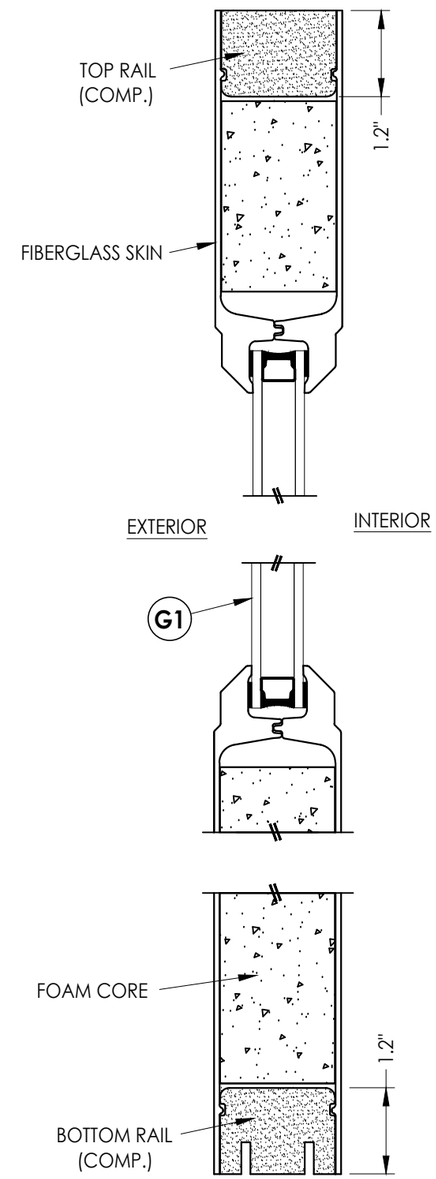

2/2 **VERTICAL CROSS SECTION**

FIBERGLASS SKIN: 0.075" MIN. THK.
FOAM CORE: XPS FOAM (1.3 PCF MIN. DENSITY)

Documents Prepared By:
Lyndon F. Schmidt
P.E. No. 43409
R.W. BUILDING CONSULTANTS, INC.
P.O. Box 230, Valrico, FL 33595
Phone No.: 813.659.9197
FBPE Registry No. 9813

PRODUCT: PLASTPRO INC FIBERGLASS DOOR

PART OR ASSEMBLY: DOOR & SIDELITE PANEL DETAILS

NO.	DATE	REVISIONS	BY
2	8/10/23	UPDATE TO 8TH ED. (2023) FBC	LFS
1	7/23/20	UPDATE TO 7TH ED (2020) FBC	LFS

DATE: 2/11/19
SCALE: N.T.S.
DWG. BY: MT
CHK. BY: LFS
DRAWING NO.: FL-28685.7
SHEET 2 OF 13

© 2019 R.W. BUILDING CONSULTANTS INC.

Z:\2023 FBC Drawings\Plastpro\FL-28685 R3\FL-28685.7.dwg

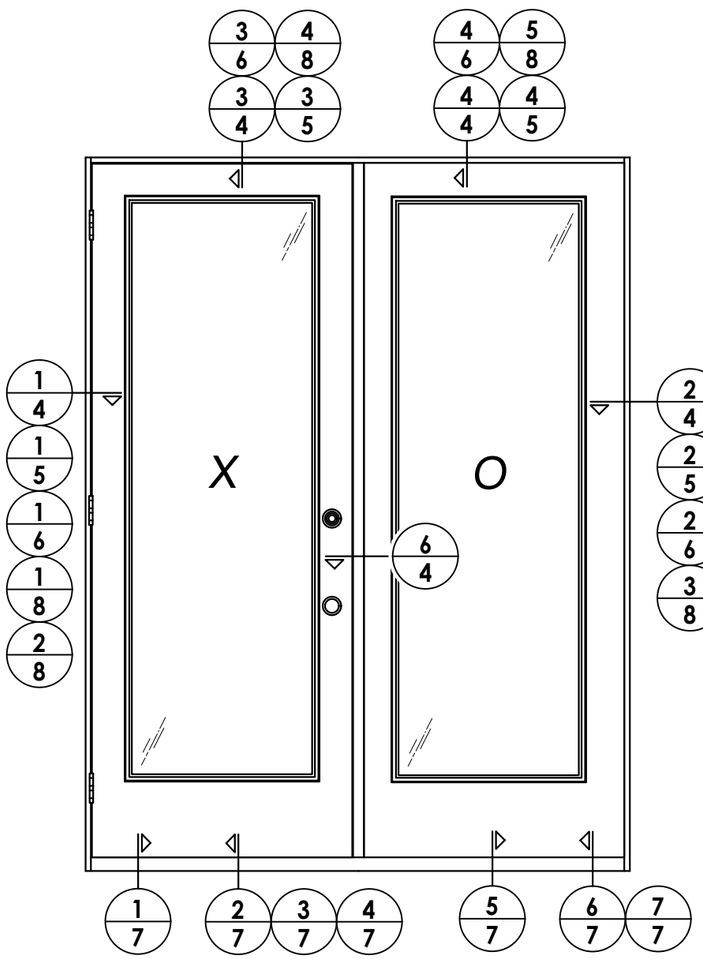

ELEVATION
XO / OX

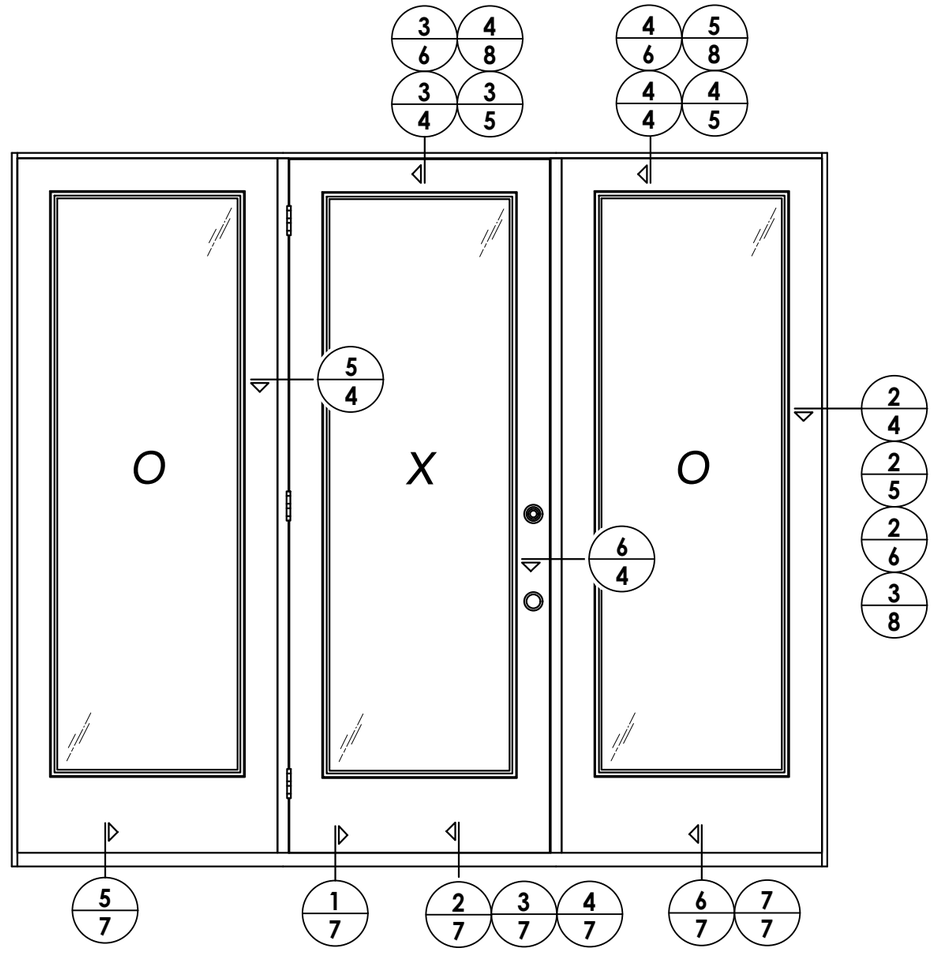

ELEVATION
OXO

Documents Prepared By:
Lyndon F. Schmidt
P.E. No. 43409

R.W. BUILDING CONSULTANTS, INC.
P.O. Box 230, Valrico, FL 33595
Phone No.: 813.659.9197
FBPE Registry No. 9813

PRODUCT: *PLASTPRO INC FIBERGLASS DOOR*

PART OR ASSEMBLY: *ELEVATIONS*

REVISIONS

NO.	DATE	BY
2	8/10/23 UPDATE TO 8TH ED. (2023) FBC	LFS
1	7/23/20 UPDATE TO 7TH ED (2020) FBC	LFS

DATE: 2/11/19
SCALE: N.T.S.
DWG. BY: MT
CHK. BY: LFS
DRAWING NO.: FL-28685.7
SHEET 3 OF 13

© 2019 R.W. Building Consultants Inc.

Z:\2023 FBC Drawings\Plastpro\FL-28685 R3\FL-28685.7.dwg

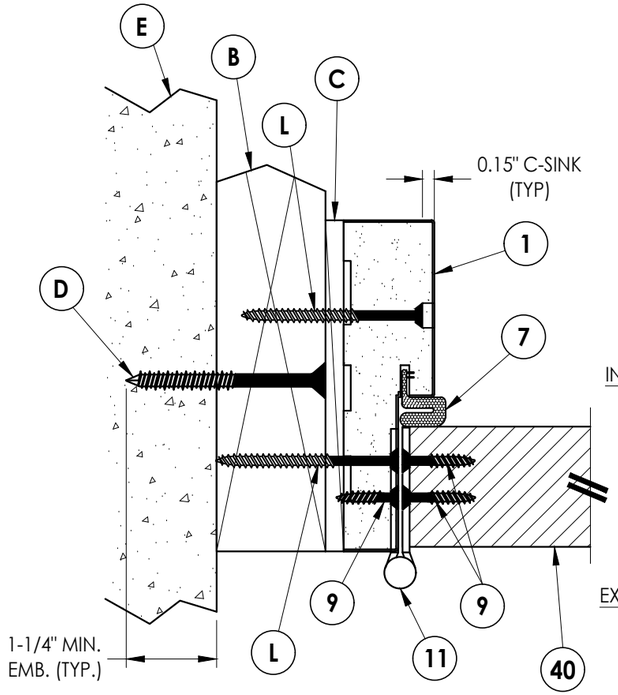

1/4 HORIZONTAL CROSS SECTION
Outswing shown (Inswing similar)

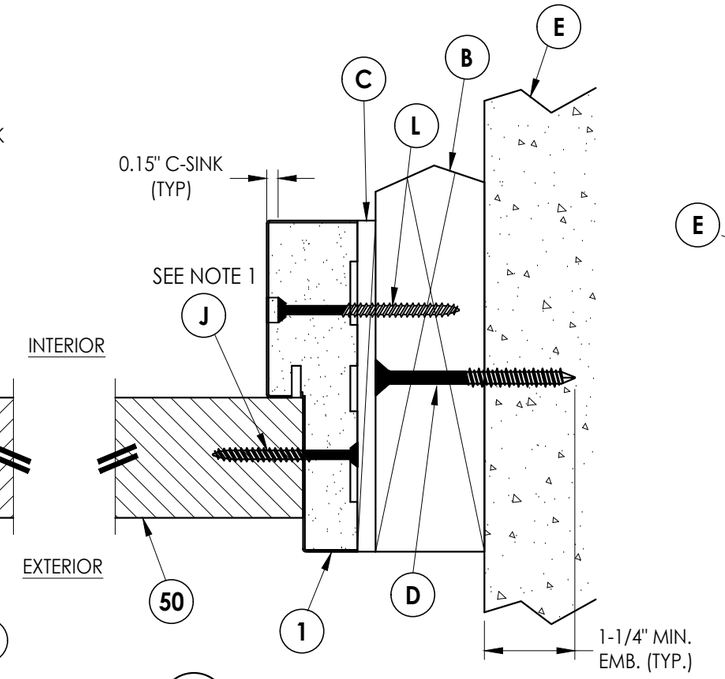

2/4 HORIZONTAL CROSS SECTION
Outswing shown (Inswing similar)

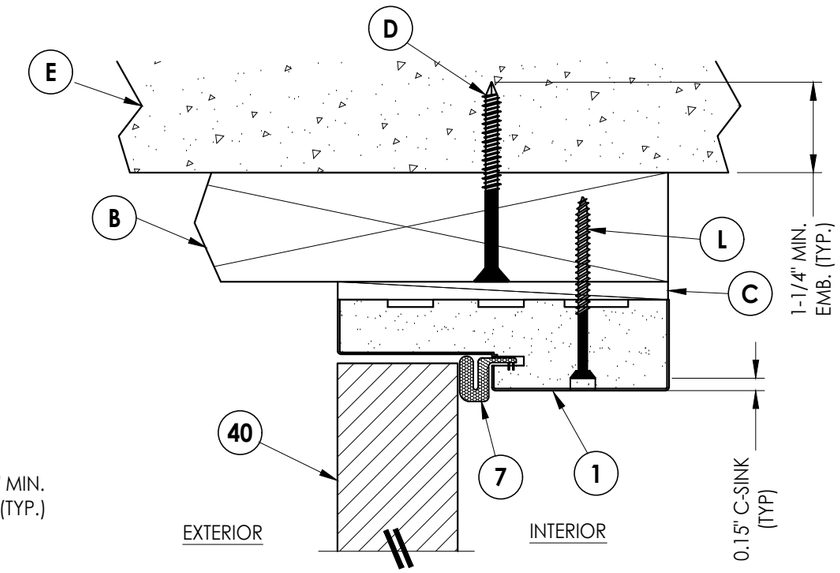

3/4 VERTICAL CROSS SECTION
Outswing shown (Inswing similar)

NOTES:

1. Spacing for item J & L: 6" from each end and 5 more equally spaced along sidelite jamb (7 total).
2. Spacing for item J @ head & sill: 6" from ends (2 total).

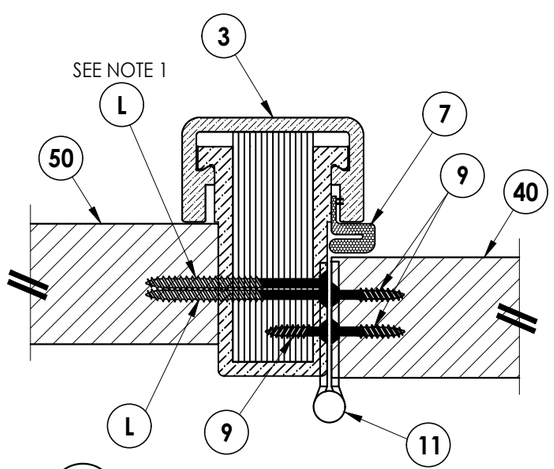

5/4 HORIZONTAL CROSS SECTION
Outswing shown (Inswing similar)

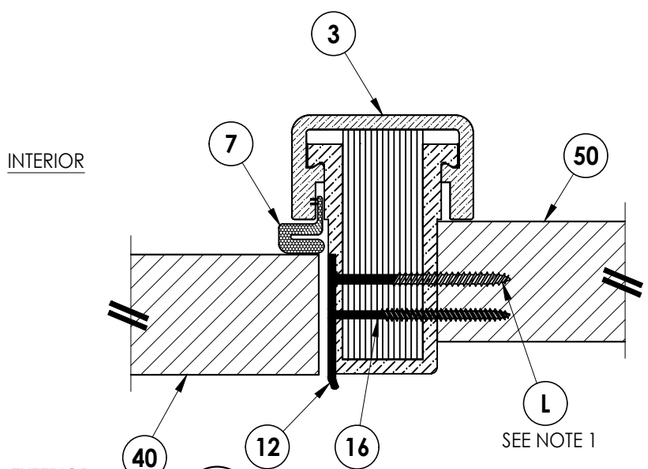

6/4 HORIZONTAL CROSS SECTION
Outswing shown (Inswing similar)

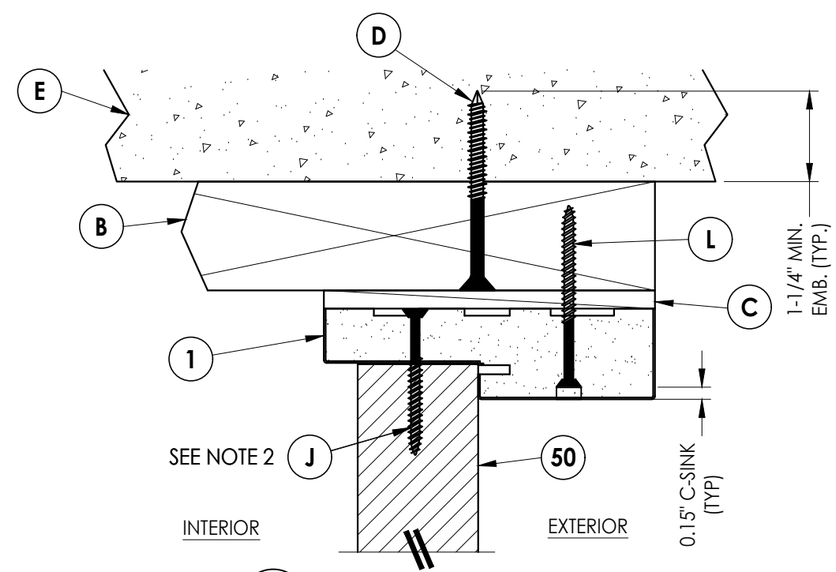

4/4 VERTICAL CROSS SECTION
Outswing shown (Inswing similar)

Documents Prepared By:
Lyndon F. Schmidt
P.E. No. 43409

RW BUILDING CONSULTANTS, INC.
P.O. Box 230, Valrico, FL 33595
Phone No.: 813.659.9197
FBPE Registry No. 9813

PRODUCT: PLASTPRO INC FIBERGLASS DOOR

PART OR ASSEMBLY: HORIZONTAL & VERTICAL CROSS SECTIONS (2X BUCK)

REVISIONS

NO.	DATE		BY
2	8/10/23	UPDATE TO 8TH ED. (2023) FBC	LFS
1	7/23/20	UPDATE TO 7TH ED (2020) FBC	LFS

DATE: 2/11/19
SCALE: N.T.S.
DWG. BY: MT
CHK. BY: LFS
DRAWING NO.: FL-28685.7
SHEET 4 OF 13

© 2019 R.W. BUILDING CONSULTANTS INC.

Z:\2023 FBC Drawings\Plastpro\FL-28685 R3\FL-28685.7.dwg

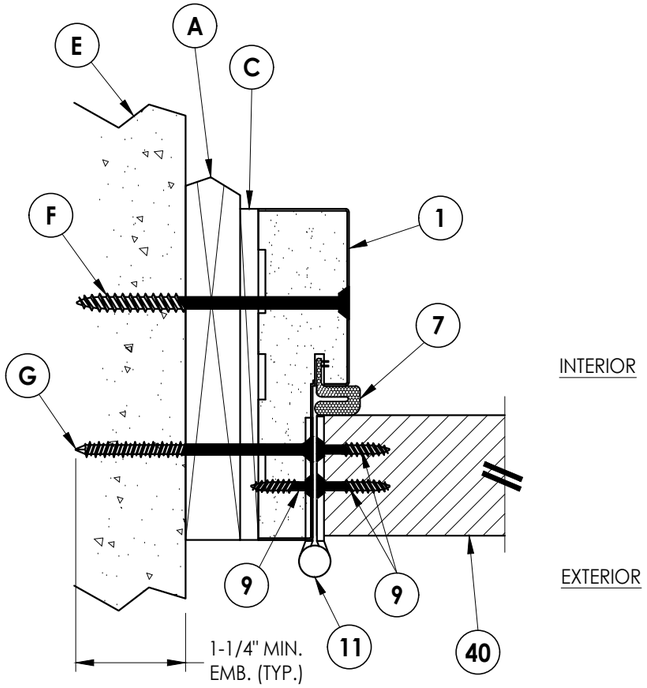

1/5 HORIZONTAL CROSS SECTION
Shown w/ 1X sub-buck
Outswing shown (Inswing similar)

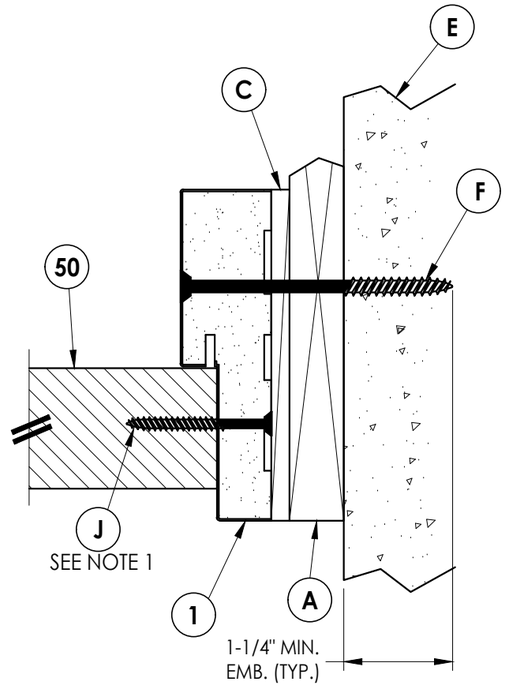

2/5 HORIZONTAL CROSS SECTION
Shown w/ 1X sub-buck
Outswing shown (Inswing similar)

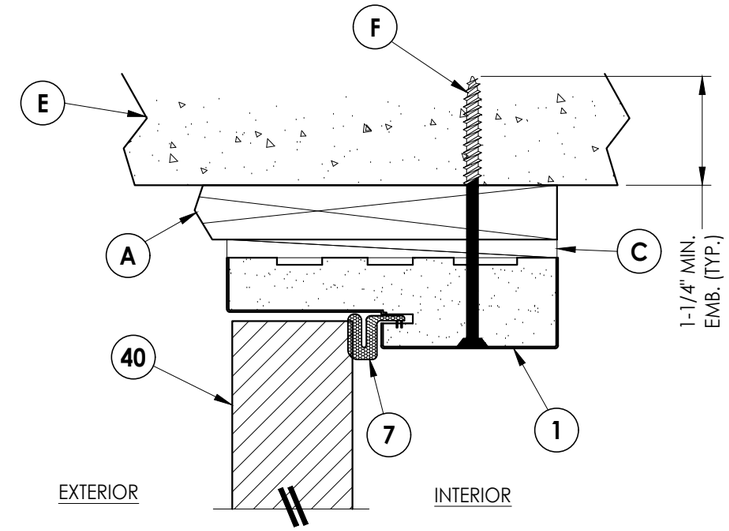

3/5 VERTICAL CROSS SECTION
Shown w/ 1X sub-buck
Outswing shown (Inswing similar)

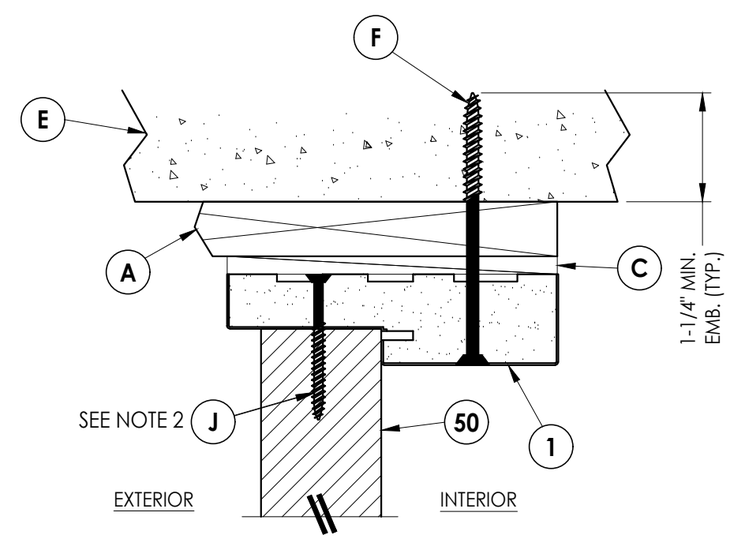

4/5 VERTICAL CROSS SECTION
Shown w/ 1X sub-buck
Outswing shown (Inswing similar)

NOTES:
1. Spacing for item J: 6" from each end and 5 more equally spaced along sidelite jamb (7 total).
2. Spacing for item J @ head & sill: 6" from ends (2 total).

Documents Prepared By:
Lyndon F. Schmidt
P.E. No. 43409

RW BUILDING CONSULTANTS, INC.
P.O. Box 230, Valrico, FL 33595
Phone No.: 813.659.9197
FBPE Registry No. 9813

PRODUCT: PLASTPRO INC FIBERGLASS DOOR

PART OR ASSEMBLY: HORIZONTAL & VERTICAL CROSS SECTIONS (1X BUCK)

REVISIONS

NO.	DATE		BY
2	8/10/23	UPDATE TO 8TH ED. (2023) FBC	LFS
1	7/23/20	UPDATE TO 7TH ED (2020) FBC	LFS

DATE: 2/11/19
SCALE: N.T.S.
DWG. BY: MT
CHK. BY: LFS
DRAWING NO.: FL-28685.7
SHEET 5 OF 13

© 2019 R.W. Building Consultants Inc.

Z:\2023 FBC Drawings\Plastpro\FL-28685 R3\FL-28685.7.dwg

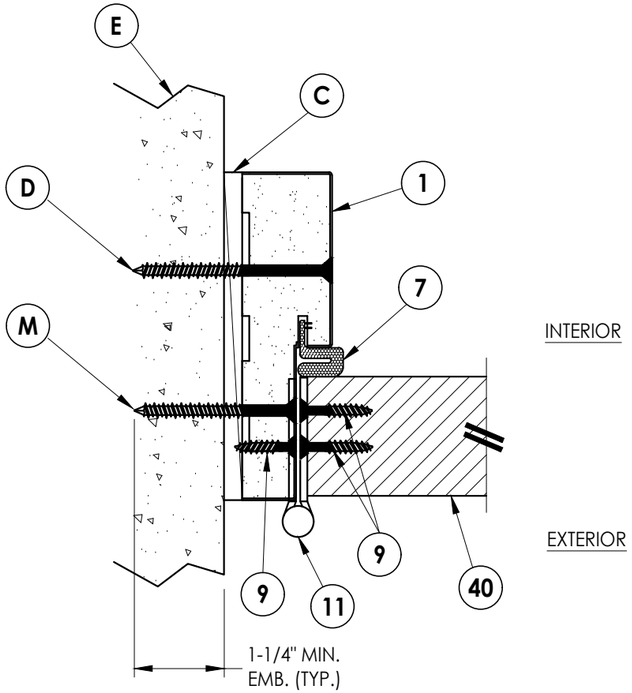

1/6 HORIZONTAL CROSS SECTION
Shown Direct to Masonry
Outswing shown (Inswing similar)

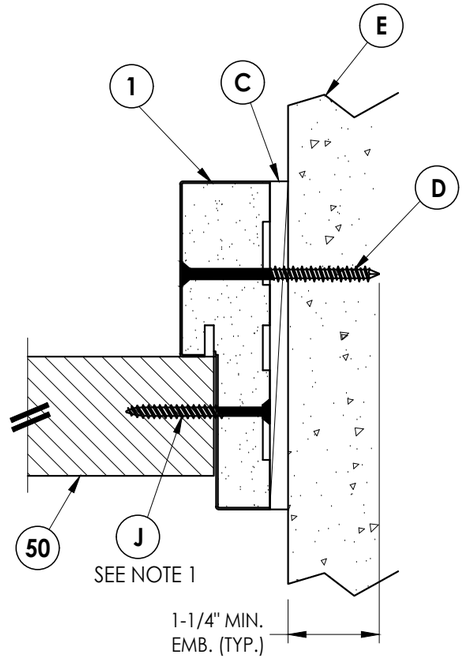

2/6 HORIZONTAL CROSS SECTION
Shown Direct to Masonry
Outswing shown (Inswing similar)

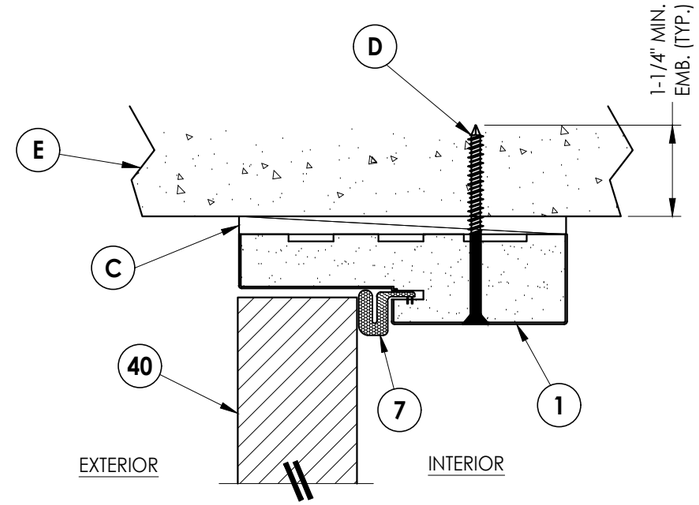

3/6 VERTICAL CROSS SECTION
Shown Direct to Masonry
Outswing shown (Inswing similar)

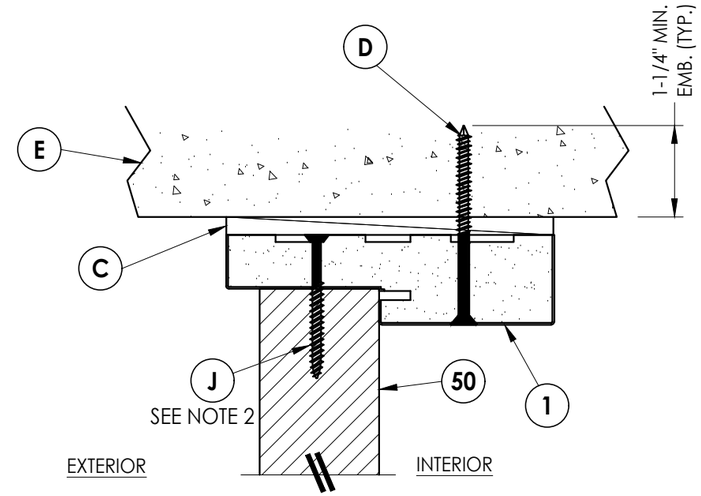

4/6 VERTICAL CROSS SECTION
Shown Direct to Masonry
Outswing shown (Inswing similar)

NOTES:
1. Spacing for item J: 6" from each end and 5 more equally spaced along sidelite jamb (7 total).
2. Spacing for item J @ head & sill: 6" from ends (2 total).

Documents Prepared By:
Lyndon F. Schmidt
P.E. No. 43409
R.W. BUILDING CONSULTANTS, INC.
P.O. Box 230, Valrico, FL 33595
Phone No.: 813.659.9197
FBPE Registry No. 9813

PRODUCT: PLASTPRO INC FIBERGLASS DOOR

PART OR ASSEMBLY: HORIZONTAL & VERTICAL CROSS SECTIONS (DIRECT TO MASONRY)

NO.	DATE	REVISIONS	BY
2	8/10/23	UPDATE TO 8TH ED. (2023) FBC	LFS
1	7/23/20	UPDATE TO 7TH ED (2020) FBC	LFS

DATE: 2/11/19
SCALE: N.T.S.
DWG. BY: MT
CHK. BY: LFS
DRAWING NO.: FL-28685.7
SHEET 6 OF 13

© 2019 R.W. Building Consultants Inc.

Z:\2023 FBC Drawings\Plastpro\FL-28685 R3\FL-28685.7.dwg

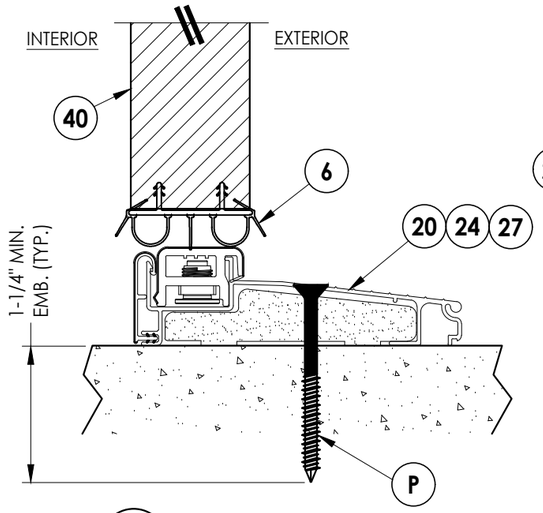

1/7 **VERTICAL CROSS SECTION**
Inswing sill

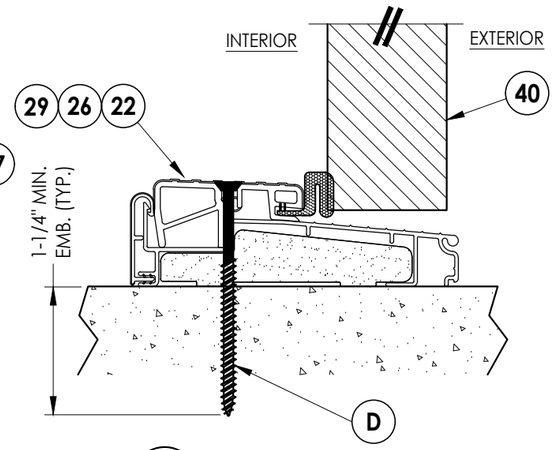

2/7 **VERTICAL CROSS SECTION**
Outswing sill

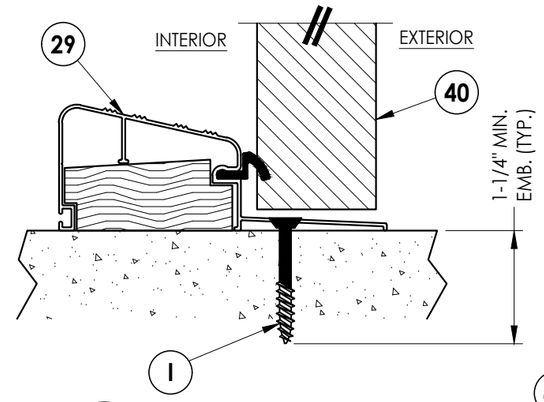

3/7 **VERTICAL CROSS SECTION**
Outswing sill

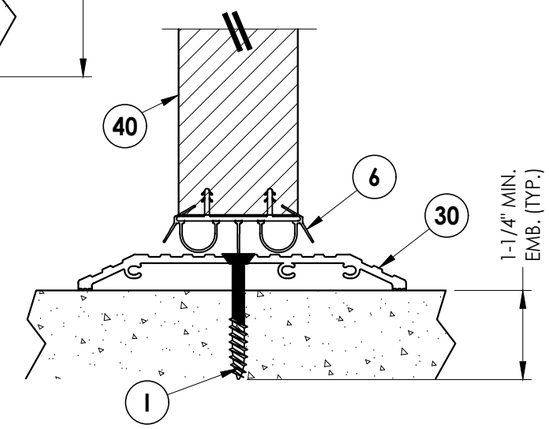

4/7 **VERTICAL CROSS SECTION**
ADA Sill

NOTE:
1. Spacing for item J & L @ head & sill: 6" from each end (2 total).

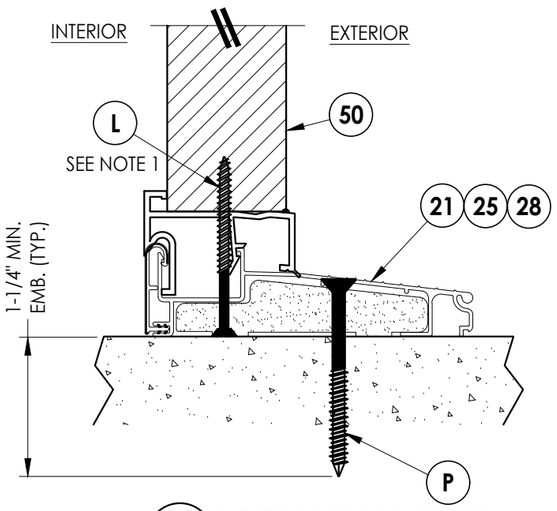

5/7 **VERTICAL CROSS SECTION**
Inswing sill

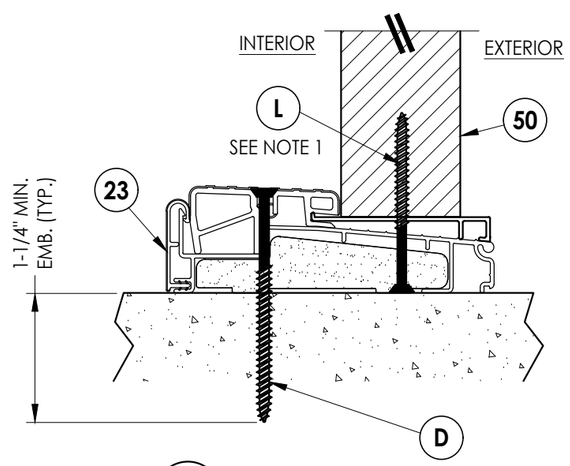

6/7 **VERTICAL CROSS SECTION**
Inswing sill

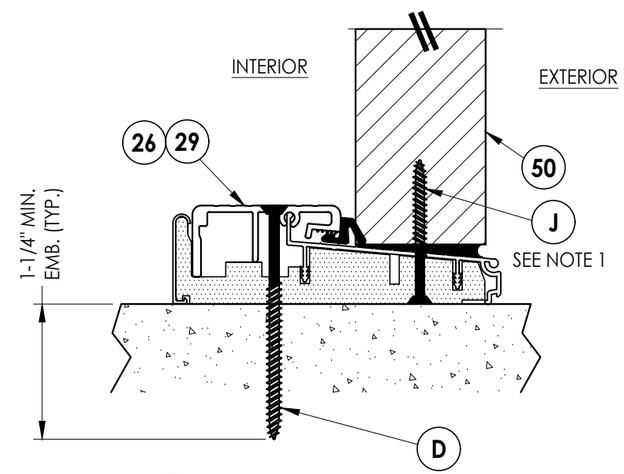

7/7 **VERTICAL CROSS SECTION**
Outswing sill

Documents Prepared By:
Lyndon F. Schmidt
P.E. No. 43409

RW BUILDING CONSULTANTS, INC.
P.O. Box 230, Valrico, FL 33595
Phone No.: 813.659.9197
FBPE Registry No. 9813

PRODUCT: PLASTPRO INC FIBERGLASS DOOR

PART OR ASSEMBLY: VERTICAL CROSS SECTIONS (THRESHOLDS)

REVISIONS

NO.	DATE		BY
2	8/10/23	UPDATE TO 8TH ED. (2023) FBC	LFS
1	7/23/20	UPDATE TO 7TH ED (2020) FBC	LFS

DATE: 2/11/19
SCALE: N.T.S.
DWG. BY: MT
CHK. BY: LFS
DRAWING NO.: FL-28685.7
SHEET 7 OF 13

© 2019 R.W. BUILDING CONSULTANTS INC.

Z:\2023 FBC Drawings\Plastpro\FL-28685 R3\FL-28685.7.dwg

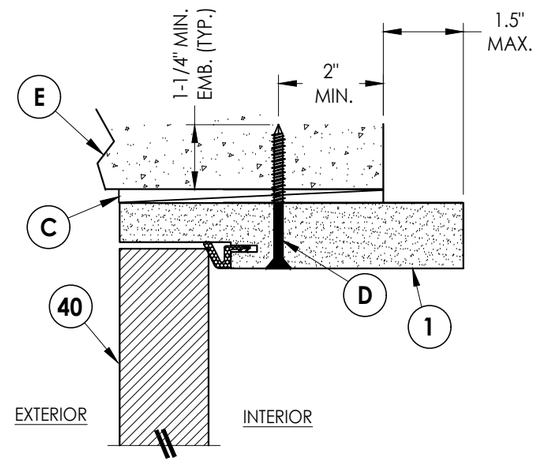

4/8 VERTICAL CROSS SECTION
Shown Direct to Masonry
Outswing only w/ 6-9/16" jamb

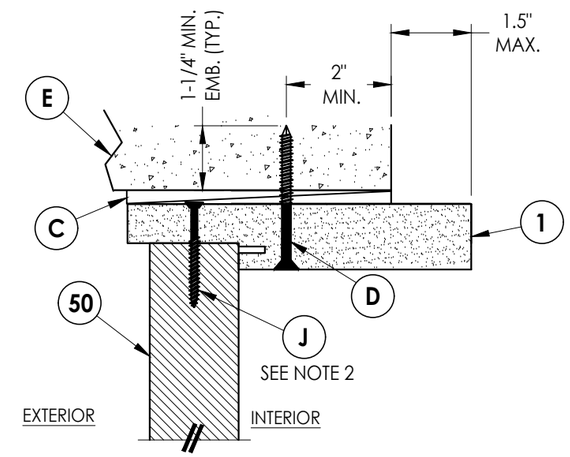

5/8 VERTICAL CROSS SECTION
Shown Direct to Masonry
Outswing only w/ 6-9/16" jamb

NOTES:
1. Spacing for item J: 6" from each end and 5 more equally spaced along sidelite jamb (7 total).
2. Spacing for item J @ head & sill: 6" from ends (2 total).

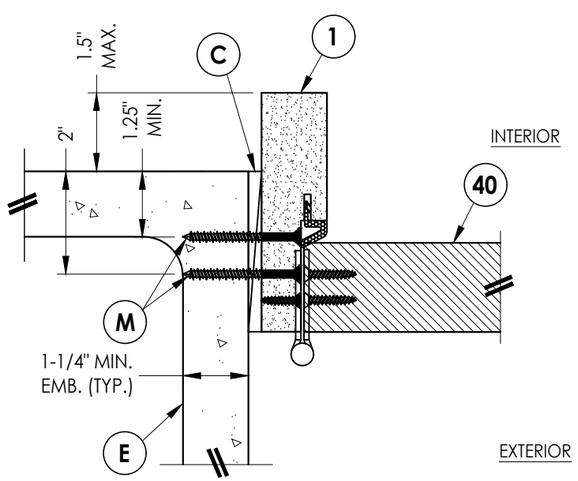

1/8 HORIZONTAL CROSS SECTION
Shown Direct to Masonry
Outswing only w/ 4-9/16" jamb
Double door only (N/A w/ Sidelites)

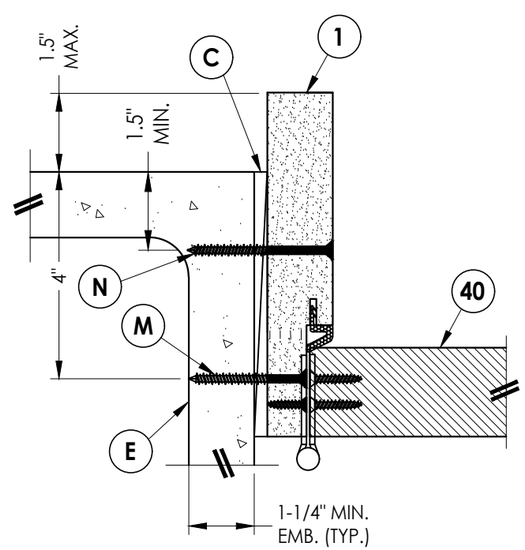

2/8 HORIZONTAL CROSS SECTION
Shown Direct to Masonry
Outswing only w/ 6-9/16" jamb

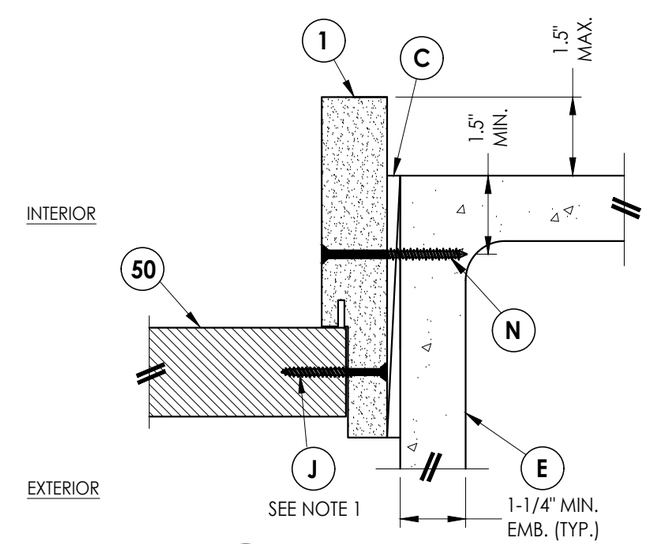

3/8 HORIZONTAL CROSS SECTION
Shown Direct to Masonry
Outswing only w/ 6-9/16" jamb

Documents Prepared By:
Lyndon F. Schmidt
P.E. No. 43409
R.W. BUILDING CONSULTANTS, INC.
P.O. Box 230, Valrico, FL 33595
Phone No.: 813.659.9197
FBPE Registry No. 9813

PRODUCT: PLASTPRO INC FIBERGLASS DOOR

PART OR ASSEMBLY: HORIZONTAL & VERTICAL SECTIONS (DIRECT TO MASONRY)

REVISIONS

NO.	DATE		BY
2	8/10/23	UPDATE TO 8TH ED. (2023) FBC	LFS
1	7/23/20	UPDATE TO 7TH ED (2020) FBC	LFS

DATE: 2/11/19
SCALE: N.T.S.
DWG. BY: MT
CHK. BY: LFS
DRAWING NO.: FL-28685.7
SHEET 8 OF 13

© 2019 R.W. Building Consultants Inc.

Z:\2023 FBC Drawings\Plastpro\FL-28685 R3\FL-28685.7.dwg

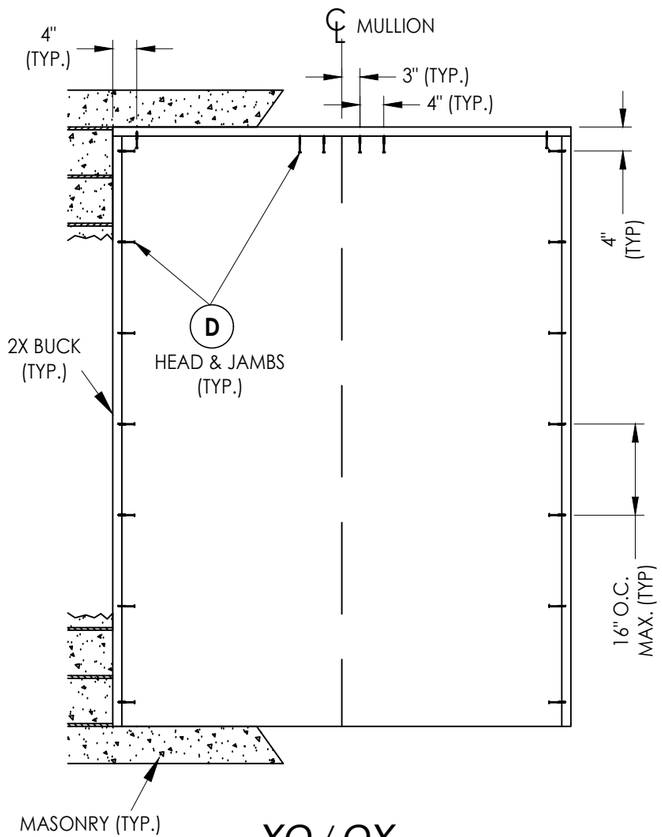

XO / OX

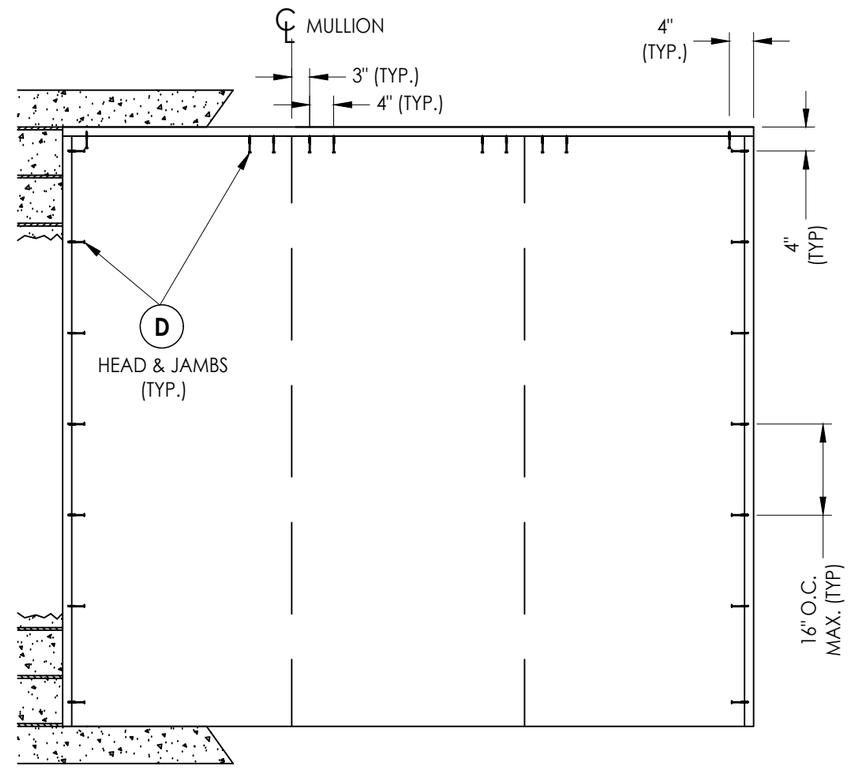

OXO

2X BUCK ANCHORING

Documents Prepared By:
Lyndon F. Schmidt
P.E. No. 43409

RW BUILDING CONSULTANTS, INC.
P.O. Box 230, Valrico, FL 33595
Phone No.: 813.659.9197
FBPE Registry No. 9813

PRODUCT: PLASTPRO INC. FIBERGLASS DOOR

PART OR ASSEMBLY: BUCK ANCHORING

NO.	DATE	REVISIONS	BY
2	8/10/23	UPDATE TO 8TH ED. (2023) FBC	LFS
1	7/23/20	UPDATE TO 7TH ED (2020) FBC	LFS

DATE: 2/11/19
SCALE: N.T.S.
DWG. BY: MT
CHK. BY: LFS
DRAWING NO.: FL-28685.7
SHEET 9 OF 13

© 2019 R.W. Building Consultants Inc.

Z:\2023 FBC Drawings\Plastpro\FL-28685 R3\FL-28685.7.dwg

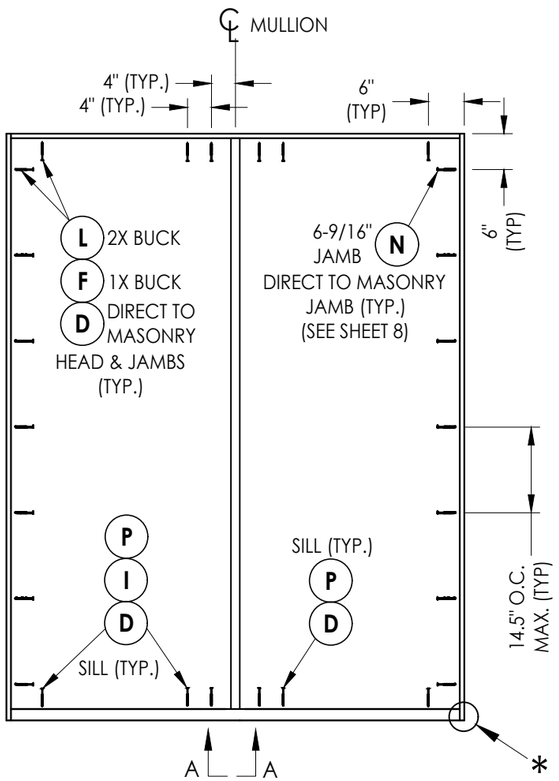

XO / OX

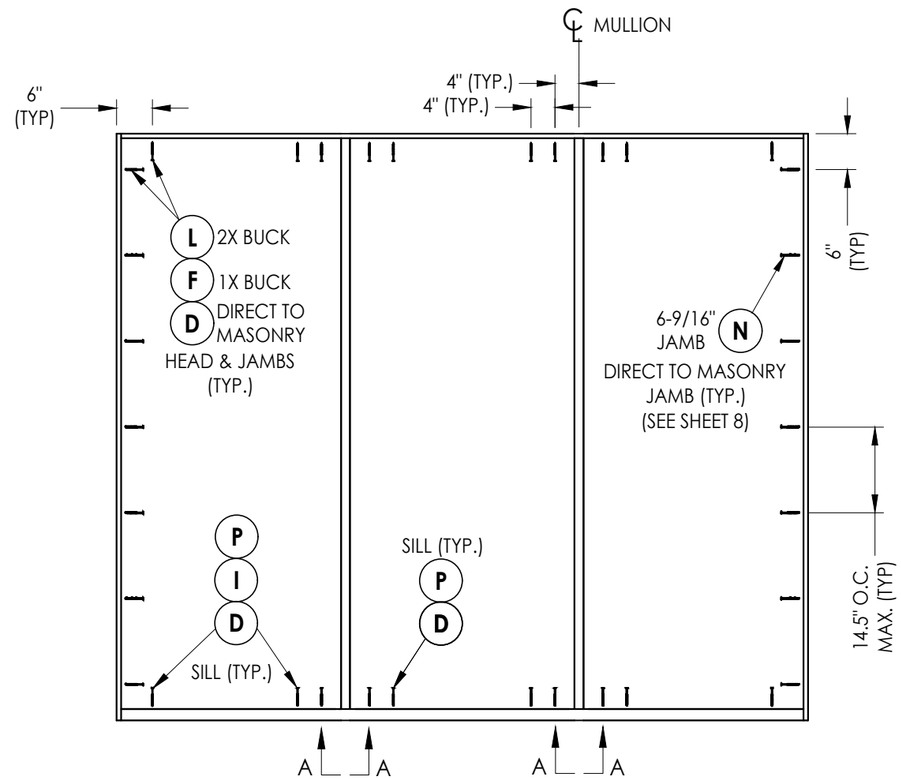

OXO

FRAME ANCHORING

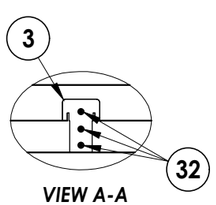

VIEW A-A
(TYP. @ HEAD & SILL)

*NOTE: FRAME CORNERS ATTACHED w/
(3) #10 X 2-1/2" FH WOOD SCREWS (TYP.)

Documents Prepared By:
Lyndon F. Schmidt
P.E. No. 43409
RW BUILDING CONSULTANTS, INC.
P.O. Box 230, Valrico, FL 33595
Phone No.: 813.659.9197
FBPE Registry No. 9813

PRODUCT: PLASTPRO INC. FIBERGLASS DOOR

PART OR ASSEMBLY: FRAME ANCHORING & HARDWARE DETAILS

NO.	DATE	REVISIONS	BY
2	8/10/23	UPDATE TO 8TH ED. (2023) FBC	LFS
1	7/23/20	UPDATE TO 7TH ED (2020) FBC	LFS

DATE: 2/11/19
SCALE: N.T.S.
DWG. BY: MT
CHK. BY: LFS
DRAWING NO.: FL-28685.7
SHEET 10 OF 13

© 2019 R.W. Building Consultants Inc.

Z:\2023 FBC Drawings\Plastpro\FL-28685 R3\FL-28685.7.dwg

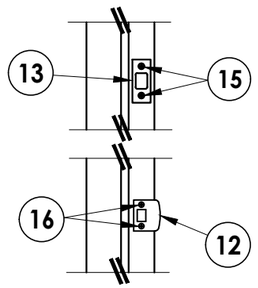

YALE HARDWARE

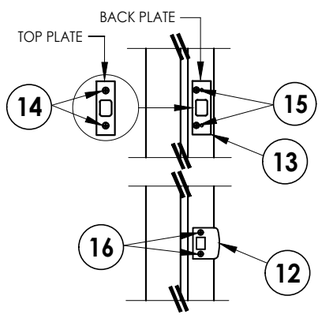

SCHLAGE HARDWARE

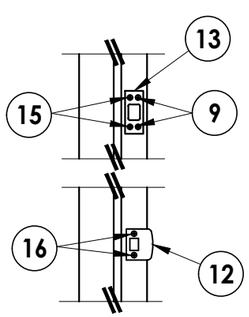

KWIKSET HARDWARE

LATCH & DEADBOLT HARDWARE STRIKE DETAILS

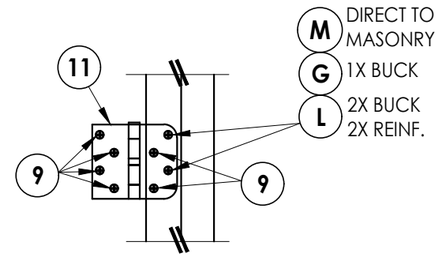

HINGE DETAIL
INSWING

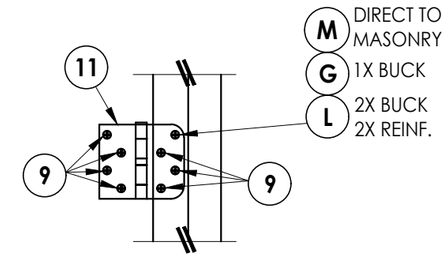

HINGE DETAIL
OUTSWING

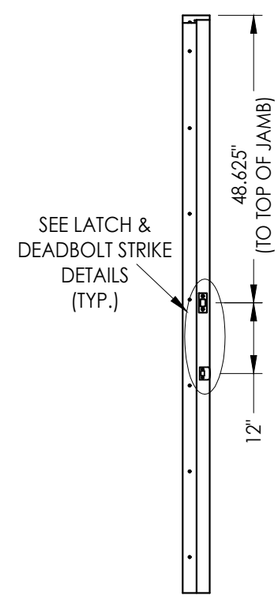

STRIKE JAMB
LATCH & DEADBOLT

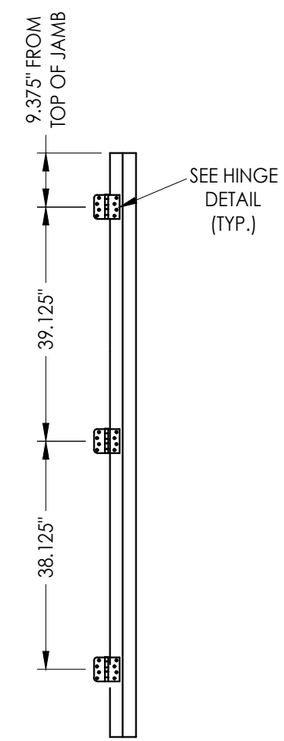

HINGE JAMB

HARDWARE DETAILS

Documents Prepared By:
Lyndon F. Schmidt
P.E. No. 43409
R.W. BUILDING CONSULTANTS, INC.
P.O. Box 230, Valrico, FL 33595
Phone No.: 813.659.9197
FBPE Registry No. 9813

PRODUCT: PLASTPRO INC FIBERGLASS DOOR

PART OR ASSEMBLY: FRAME ANCHORING & HARDWARE DETAILS

REVISIONS

NO.	DATE		BY
2	8/10/23	UPDATE TO 8TH ED. (2023) FBC	LFS
1	7/23/20	UPDATE TO 7TH ED (2020) FBC	LFS

DATE: 2/11/19
SCALE: N.T.S.
DWG. BY: MT
CHK. BY: LFS
DRAWING NO.: FL-28685.7
SHEET 11 OF 13

© 2019 R.W. Building Consultants Inc.

Z:\2023 FBC Drawings\Plastpro\FL-28685 R3\FL-28685.7.dwg

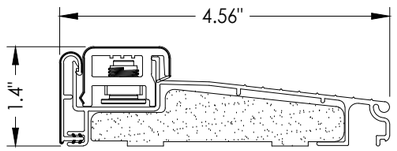

20 ***INSWING THRESHOLD***
Endura (Z-Series)

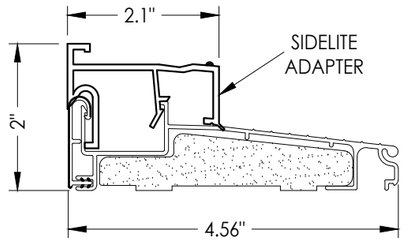

21 ***INSWING THRESHOLD w/ SIDELITE ADAPTER***
Endura (Z-Series)

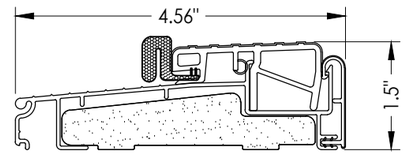

22 ***OUTSWING THRESHOLD***
Endura (Z-Series)

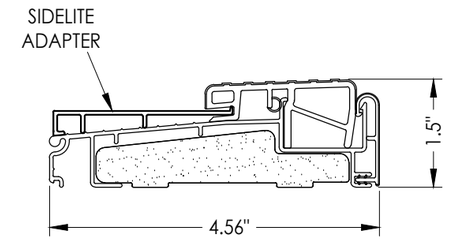

23 ***OUTSWING THRESHOLD w/ SIDELITE ADAPTER***
Endura (Z-Series)

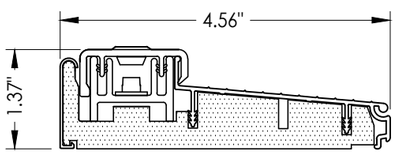

24 ***INSWING THRESHOLD***
Columbia

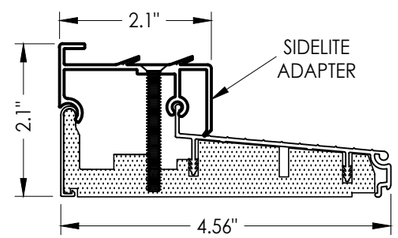

25 ***INSWING THRESHOLD w/ SIDELITE ADAPTER***
Columbia

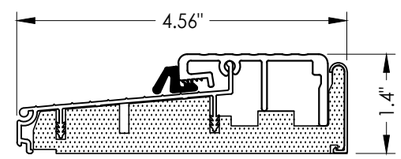

26 ***OUTSWING THRESHOLD***
Columbia

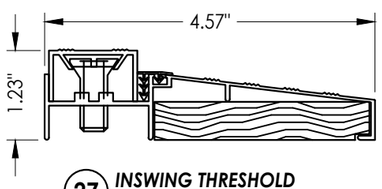

27 ***INSWING THRESHOLD***
DLP

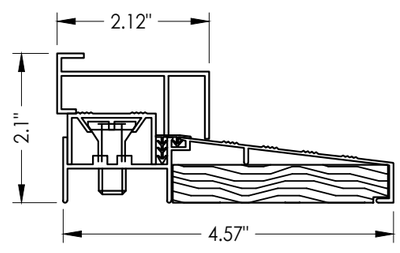

28 ***INSWING THRESHOLD w/ SIDELITE ADAPTER***
DLP

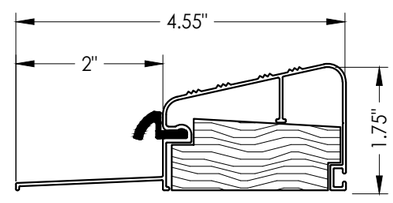

29 ***OUTSWING THRESHOLD***
DLP (QOSR)

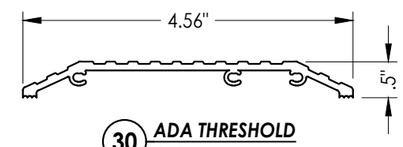

30 ***ADA THRESHOLD***
DLP

Documents Prepared By:
Lyndon F. Schmidt
P.E. No. 43409
R.W. BUILDING CONSULTANTS, INC.
P.O. Box 230, Valrico, FL 33595
Phone No.: 813.659.9197
FBPE Registry No. 9813

PRODUCT: *PLASTPRO INC. FIBERGLASS DOOR*

PART OR ASSEMBLY: *COMPONENTS*

NO.	DATE	REVISIONS	BY
2	8/10/23	UPDATE TO 8TH ED. (2023) FBC	LFS
1	7/23/20	UPDATE TO 7TH ED (2020) FBC	LFS

DATE: 2/11/19
SCALE: N.T.S.
DWG. BY: MT
CHK. BY: LFS
DRAWING NO.: FL-28685.7
SHEET 12 OF 13

© 2019 R.W. BUILDING CONSULTANTS INC.

Z:\2023 FBC Drawings\Plastpro\FL-28685 R3\FL-28685.7.dwg

BILL OF MATERIALS

ITEM #	DESCRIPTION	MATERIAL
A	1X BUCK (G >= 0.42)	WOOD
B	2X BUCK (G >= 0.42)	WOOD
C	1/4" MAX. SHIM SPACE	-
D	1/4" X 2-3/4" PFH DeWALT OR ITW CONCRETE SCREW	STEEL
E	MASONRY - 3,000 PSI MIN. CONCRETE CONFORMING TO ACI 301 OR HOLLOW BLOCK CONFORMING TO ASTM C90	CONCRETE
F	1/4" X 3-3/4" PFH DeWALT OR ITW CONCRETE SCREW	STEEL
G	3/16" x 3-1/4" PFH ITW CONCRETE SCREW	STEEL
I	1/4" X 1-3/4" PFH DeWALT OR ITW CONCRETE SCREW	STEEL
J	#10 X 2" PFH WOOD SCREW	STEEL
L	#10 X 2-1/2" PFH WOOD SCREW (1.15" MIN. EMB.)	STEEL
M	3/16" X 2-1/4" ITW CONCRETE SCREW	STEEL
N	3/16" X 2-3/4" ITW CONCRETE SCREW	STEEL
1	POLY FIBER JAMB	COMP
3	MULLION (PLASTPRO)	PVC/LVL
6	DOOR SWEEP	PVC
7	WEATHERSTRIP	FOAM
9	#9 X 3/4" PFH WOOD SCREW	STEEL
11	4" X 4" HINGE	STEEL
12	LATCH STRIKE PLATE	STEEL
13	DEADBOLT STRIKE PLATE	STEEL
14	10-32 X 3/8" PFH MACHINE SCREW	STEEL
15	#12 X 2-1/2" PFH WOOD SCREW	STEEL
16	#8 X 2-1/2" PFH WOOD SCREW	STEEL
20	INSWING THRESHOLD	ALUM/COMP
21	INSWING THRESHOLD w/ SIDELITE ADAPTER	ALUM/COMP
22	OUTSWING THRESHOLD	ALUM/COMP
23	OUTSWING THRESHOLD w/ SIDELITE ADAPTER	ALUM/COMP
24	INSWING THRESHOLD	ALUM/COMP
25	INSWING THRESHOLD w/ SIDELITE ADAPTER	ALUM/COMP
26	OUTSWING THRESHOLD	ALUM/COMP
27	INSWING THRESHOLD	ALUM/WOOD
28	INSWING THRESHOLD w/ SIDELITE ADAPTER	ALUM/WOOD
29	OUTSWING THRESHOLD	ALUM/WOOD
30	ADA THRESHOLD	ALUM
32	#10 X 3" PFH WOOD SCREW	STEEL
40	DOOR PANEL	-
50	SIDELITE PANEL	-

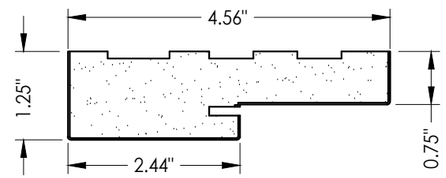

1 **POLY FIBER JAMB**
Plastpro PF Jamb

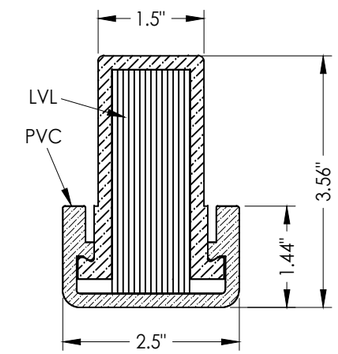

3 **INTEGRAL MULLION**
Plastpro (3-Piece)

CONCRETE ANCHOR NOTES:

1. *Concrete anchor locations at the corners may be adjusted to maintain the min. edge distance to mortar joints.*
2. *Concrete anchor locations noted as "MAX. ON CENTER" must be adjusted to maintain the min. edge distance to mortar joints, additional concrete anchors may be required to ensure the "MAX. ON CENTER" dimension are not exceeded.*
3. *Concrete anchor table:*

ANCHOR TYPE	ANCHOR SIZE	MIN. EMBEDMENT	MIN. CLEARANCE TO MASONRY EDGE	MIN. CLEARANCE TO ADJACENT ANCHOR
ITW BUILDEX TAPCON®	3/16"	1-1/4"	AS SHOWN	1-1/2"
	1/4"	1-1/4"	2"	4"
DeWALT ULTRACON®+	1/4"	1-1/4"	1"	4"

WOOD SCREW INSTALLATION NOTES:

1. *Maintain a minimum 5/8" edge distance, 1" end distance, & 1" o.c. spacing of wood screws to prevent the splitting of wood.*

Documents Prepared By:
Lyndon F. Schmidt
P.E. No. 43409
R.W. BUILDING CONSULTANTS, INC.
P.O. Box 230, Valrico, FL 33595
Phone No.: 813.659.9197
FBPE Registry No. 9813

PRODUCT: *PLASTPRO INC FIBERGLASS DOOR*

PART OR ASSEMBLY: *BILL OF MATERIALS & COMPONENTS*

REVISIONS

NO.	DATE		BY
2	8/10/23	UPDATE TO 8TH ED. (2023) FBC	LFS
1	7/23/20	UPDATE TO 7TH ED (2020) FBC	LFS

DATE: 2/11/19
SCALE: N.T.S.
DWG. BY: MT
CHK. BY: LFS
DRAWING NO.: FL-28685.7
SHEET 13 OF 13

© 2019 R.W. BUILDING CONSULTANTS INC.

Z:\2023 FBC Drawings\Plastpro\FL-28685 R3\FL-28685.7.dwg